PCET LIBRARY BANGALORE-49

CBCS SCHEME

USN | | | | | | | | | |

BME/MR503

Fifth Semester B.E./B.Tech. Degree Examination, June/July 2026
Theory of Machines

Time: 3 hrs. Max. Marks: 100

Note: 1. Answer any FIVE full questions, choosing ONE full question from each module.
2. M : Marks , L: Bloom's level , C: Course outcomes.

		Module – 1	M	L	C
Q.1	a.	Define the following: i) Lower pair ii) Higher pair iii) Structure iv) Mechanism v) Inversion	5	L1	CO1
	b.	With a neat sketch, explain Elliptical Trammel and also prove that it traces an ellipse.	10	L2	CO1
	c.	Determine the mobility of the linkages shown in Fig.Q.1(c). 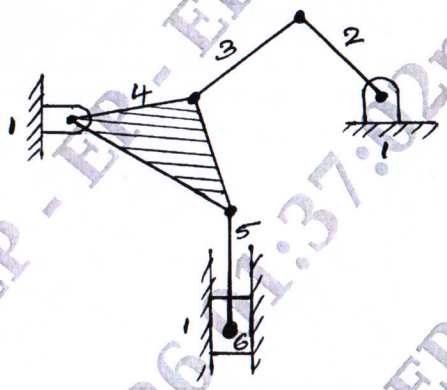 Fig.Q.1(c)	5	L2	CO1
		OR			
Q.2	a.	In a slider crank mechanism, the crank is 200 mm long and connecting rod is 750 mm long. Find analytically i) Velocity and acceleration of the slider. ii) Angular velocity and angular acceleration of connecting rod when the slider has moved 350 mm from top dead centre position. Assume crank rotates at a uniform speed of 400 rpm.	10	L2	CO1
	b.	The crank of a slider crank mechanism is 480 mm long and rotates at 20 rad/sec in the counter clockwise direction. It has a connecting rod of 1600 mm long. Determine the following when the crank is at 60° from the IDC. Determine : i) Velocity of slider ii) Angular velocity of connecting rod iii) Position and velocity of a point on the connecting rod and having least absolute velocity.	10	L3	CO1

VTU-03-06-2026 01:26:26pm - EP - EP - EP

Module – 2

Q.3	**a.**	State the condition for static equilibrium of a body subjected to i) Two force member ii) Two force member with a torque.	**6**	**L2**	**CO2**
	b.	For the static equilibrium of the mechanism as shown in Fig.Q.3(b). Find the required input torque. The dimensions are AB = 150 mm, BC = AD = 500 mm, DC = 300 mm, CE = 100 mm and EF = 450 mm. 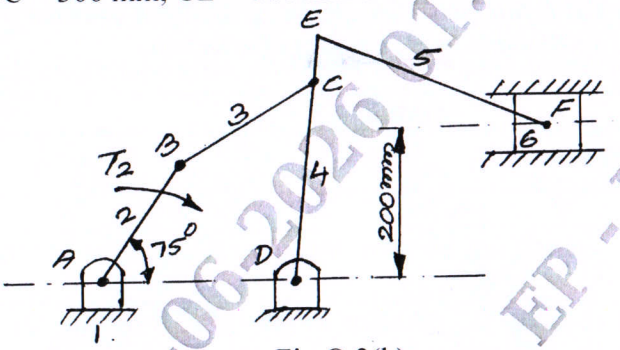 Fig.Q.3(b)	**14**	**L3**	**CO2**

OR

Q.4	**a.**	State and explain D' Alembert's principle.	**5**	**L2**	**CO2**
	b.	In a four bar linkage ABCD shown in Fig.Q.4(b), the link AB revolves with an angular velocity of 20 rad/sec and angular acceleration of 100 rad/sec^2 both in clockwise direction when it makes an angle of 45° with AD. Neglecting gravitational effects, find the torque necessary to overcome inertia forces. The lengths of various links are – AB = CD = 40 cm, BC = 50 cm, AD = 75 cm, the mass of links is 15kg per meter. 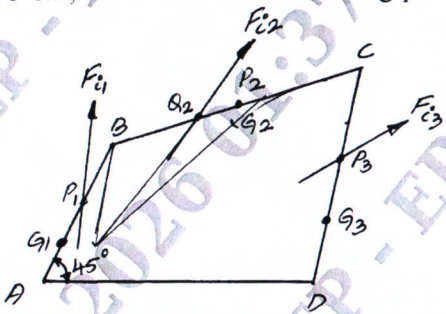 Fig.Q.4(b)	**15**	**L3**	**CO2**

Module – 3

Q.5	**a.**	State and prove the law of gearing for constant velocity ratio.	**5**	**L2**	**CO3**
	b.	Two mating spur gear with modular pitch of 6.5 mm have 19 and 47 teeth of 20° pressure angle and 6.5 mm addendum. Determine the number of pairs of teeth in contact and angle turned through by the larger wheel for one pair of teeth in contact. Determine also the sliding velocity at the instant i) Engagement commencer ii) The engagement terminator iii) At the pitch point When the pitch line velocity is 1.2 m/sec.	**15**	**L3**	**CO3**

VTU-03-06-2026 01:26:26pm EP - EP - EP - EP - EP - EP - EP - EP - EP - EP - EP - EP

		OR			
Q.6	**a.**	Define Gear train. Explain compound Gear train with a neat sketch.	**5**	**L2**	**CO3**
	b.	An epicyclic gear train consists of a sun wheel (s), a stationary internal gear (E) and 3-identical planet wheels (P) carried on a star shaped planet carrier (C). The size of different toothed wheels are such that the planet carrier C rotates at 1/5 of the speed of the sun wheel. The minimum number of teeth on any wheel is 16. The driving torque on the sun wheel is 100 N-m. Determine: i) The number of teeth on different wheels of train. ii) Torque necessary to keep the internal gear stationary.	**15**	**L3**	**CO3**
		Module – 4			
Q.7		A shaft carrier four masses in parallel planer A, B, C and D in this order along its length. The mass at B and C are 18 kg and 12.5 kg respectively and each has an eccentricity of 60 mm. The masses at A and D have an eccentricity of 80 mm. The angle between the masses at B and C is 100° and that between the masses at B and A is 190°, both being measured in the same direction. The axial distance between the planes A and B is 100 mm and that between B and C is 200 mm. If the shaft is in complete dynamic balance, determine: i) The magnitude of the masses at A and D ii) The distance between planes A and D iii) The angular position of the mass D.	**20**	**L3**	**CO4**
		OR			
Q.8	**a.**	Define the following: i) Height of a governor ii) Sleeve lift iii) Sensitiveness iv) Isochronous v) Hunting	**10**	**L2**	**CO4**
	b.	The arms of a porter governor are each 250 mm long and pivoted on the governor axis. The mass of each ball is 5 kg and the mass of the central sleeve is 30 kg. The radius of rotation of the balls is 150 mm when the sleeve begins to rise and reaches a value of 200 mm for maximum speed. Determine the speed range of the governor. If the friction at the sleeve is equivalent of 20 N of load at the sleeve, determine how speed range is modified.	**10**	**L3**	**CO4**
		Module – 5			
Q.9	**a.**	Determine the natural frequency of the system as shown in Fig.Q.9(a). 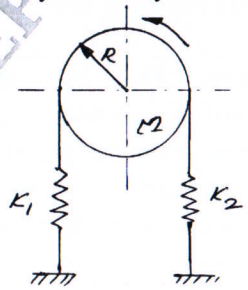 Fig.Q.9(a)	**10**	**L3**	**CO5**

VTU-03-06-2026 01:26:26pm EP - EP - EP -

	b.	The vibrating system of mass weight 70 N, a spring of stiffness 10 N/mm, damping co-efficient 0.036 Ns/mm. Determine : i) Natural frequency of the system ii) Damping factor iii) Ratio of any two successive amplitudes iv) Logarithmic decrement v) Damped natural frequency vi) Periodic time vii) Ratio of peak amplitude after 12 cycles to the peak amplitude in 1st cycle.	**10**	**L3**	**CO5**
		OR			
Q.10	**a.**	Explain the concept of forced vibration due to rotating unbalance.	**10**	**L2**	**CO5**
	b.	A weight of 60 N suspended by a spring of stiffness 1.2 kN/m is forced to vibrate by a harmonic force of 10 N. Assuming viscous damping of 0.086 KNs/m. Determine : i) The resonant frequency ii) Amplitude at resonance iii) Phase angle at resonance iv) Frequency corresponding to peak amplitude v) Peak amplitude.	**10**	**L3**	**CO5**

* * * * *

EP - EP - EP -